Whammy 5 – NEO – Version 1.00
By melatroid

In Process!!!
Wait of a working version!

melatroid@gmail.com

Calibration

Midi Access

Time

Momantary / Change Effects

Blend Mix

LED On/OFF

Effect On/OFF

Front

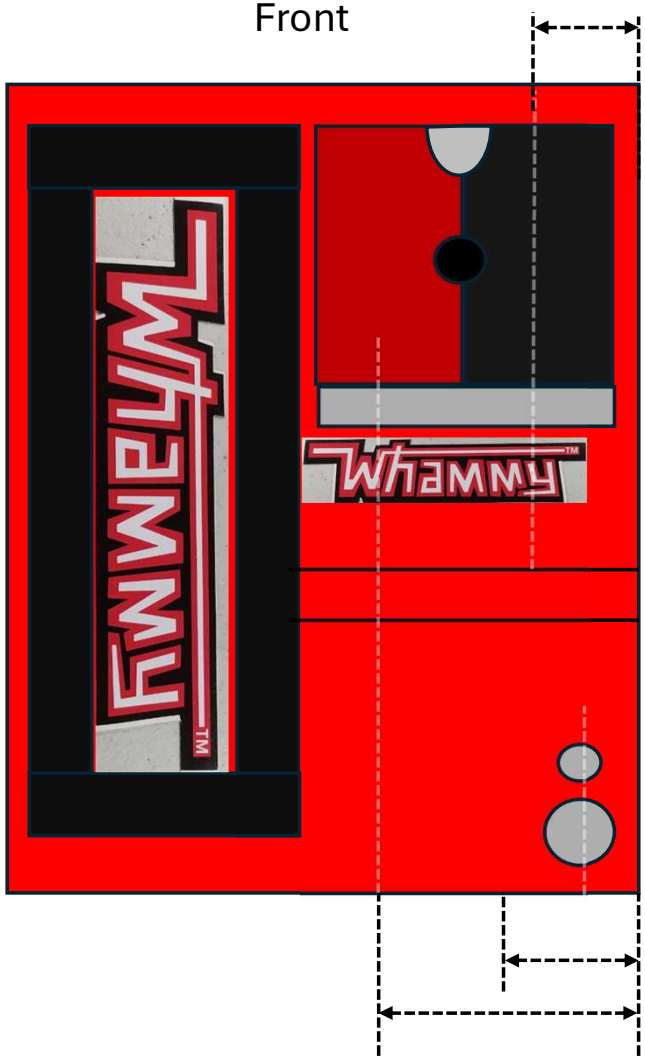

Back

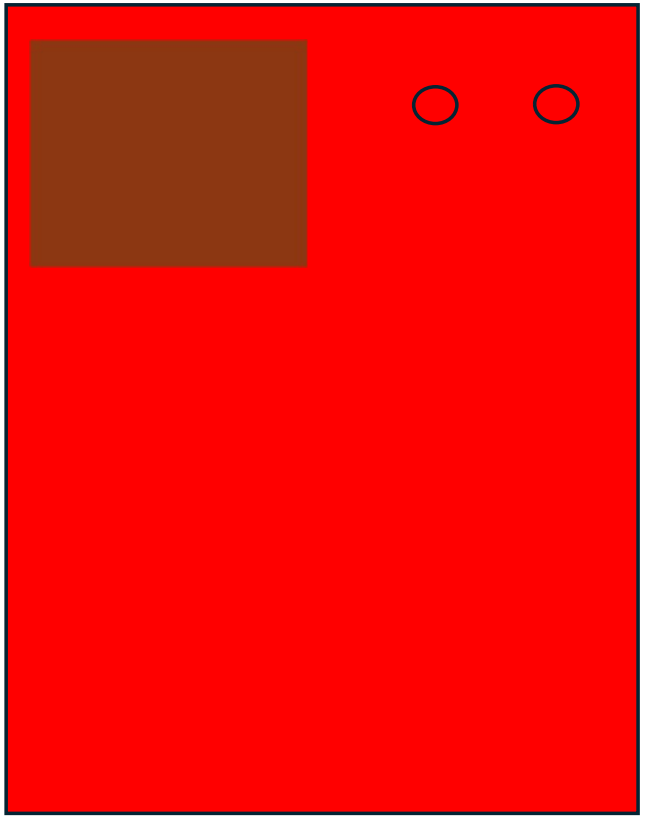

Parts

https://tweakable-parts.com/de/fussschalter/800-spst-momentary-switch.html

Toogle Switch 2x
Midi Access /
Calibration

SPST Momantary

220Ω 2x

B0505S-1W

AC/DC
LM2596

10KΩ

Raspberry Pi
2040 Zero

ELKO/Ceramic
Condenser

22-47
uF

100 nF
47 nF

Power Supply

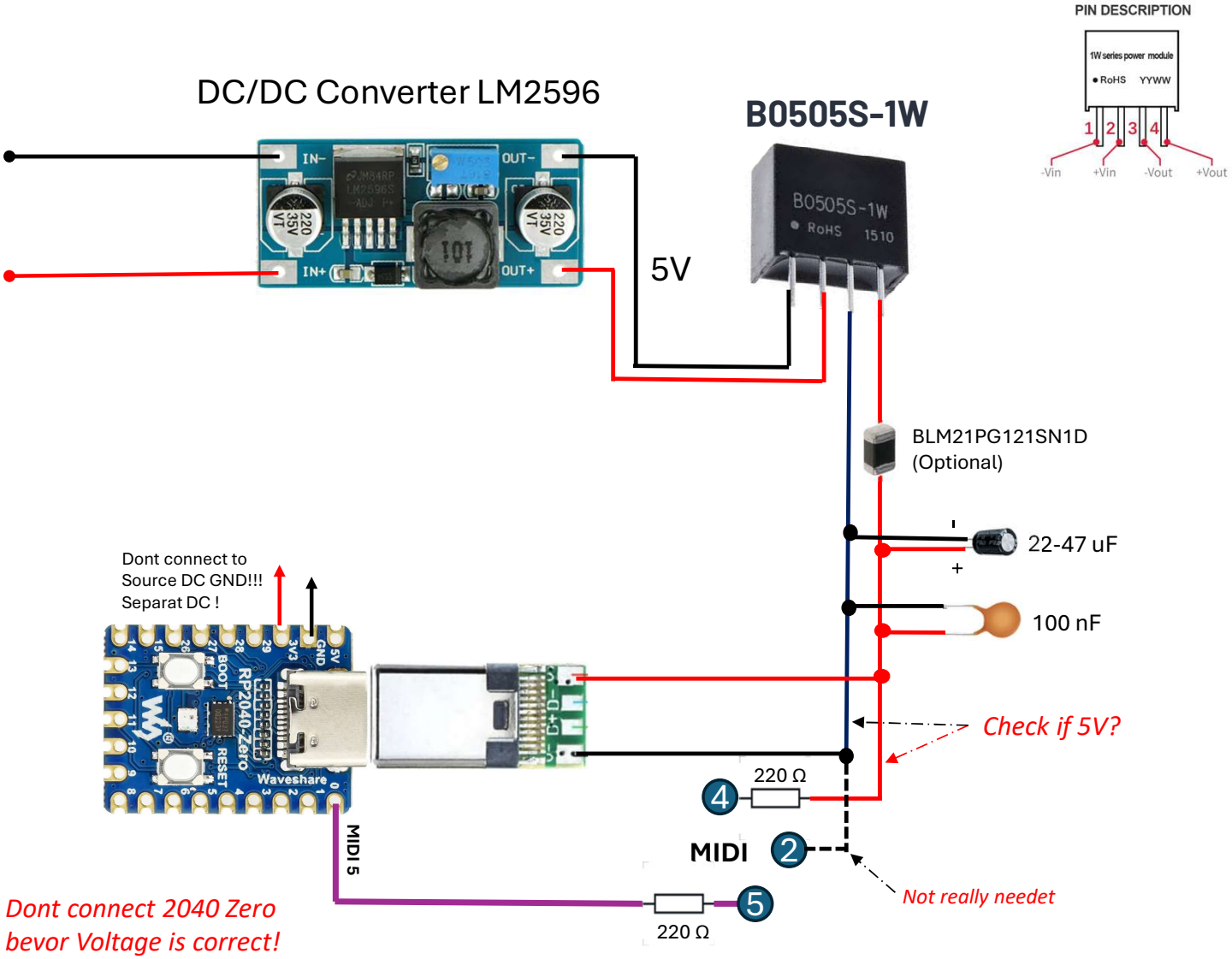

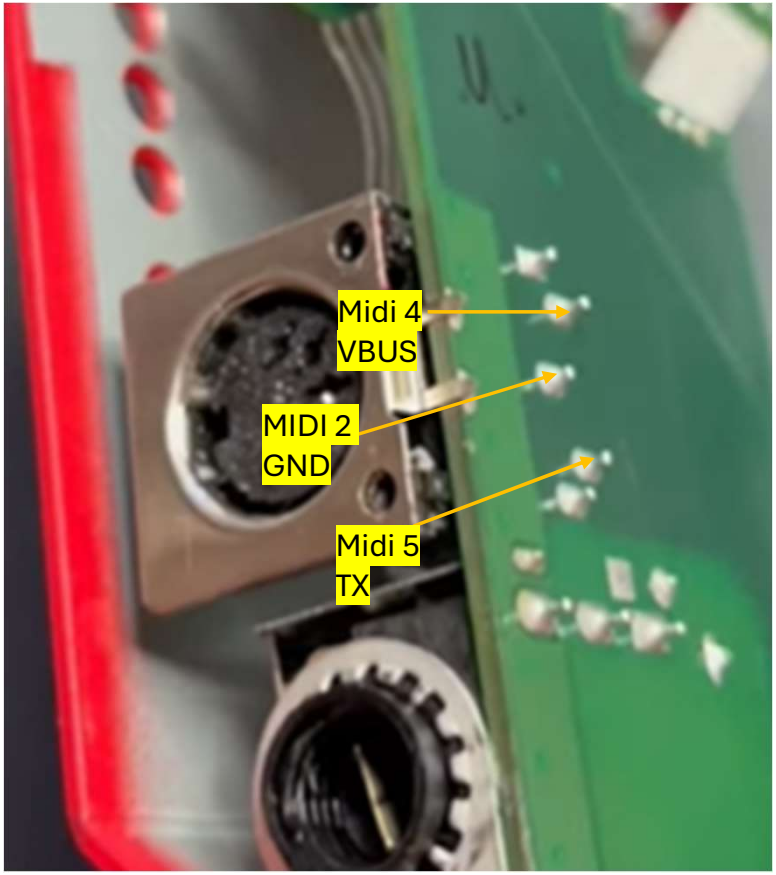
Midi 4
VBUS
MIDI 2
GND
Midi 5
TX

Auto Pedal Return

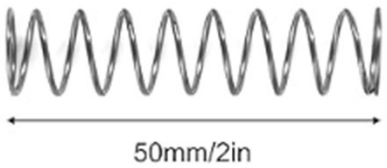

1,12kg

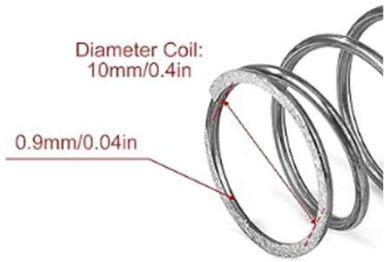

Midi Test

Anti- Noise-Filter

Final Front/Back